NikolaTesla Invert Scratch Proof

Downdraft induction cooktop

MEASUREMENTS

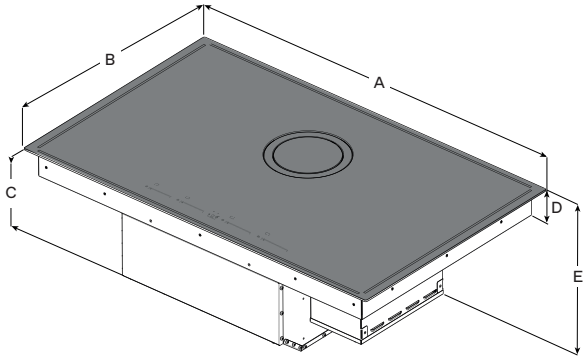

	ENI436AS
A	36" (91.54 cm)
B	22 9/16" (56.4 cm)
C	10 3/16" (25.9 cm)
D	2 9/16" (6.4 cm)
E	6 13/16" (17.29 cm)

DESCRIPTION

With it´s pure, minimalist lines, NikolaTesla Invert Scratch Proof embodies an exclusive fusion of design and technology, redefining the everyday cooking experience.

A return to essentials, this sleek induction cooktop now features scratch proof glass, offering enhanced durability while preserving it´s refined aesthetic. Its seamless surface and display vanish completely in standby mode, while the integrated extraction area remains discreetly concealed beneath black glass and a cast iron circle at the center, an elegant detail that elevates the design without disrupting the kitchen's harmony.



FEATURES

- Timer
- Temperature manager
- Child lock
- Long life filter ++
- Pot self-detection
- Bridge zones
- Easy to mantain
- Total integration
- Stop and go
- Airmatic
- Delay switch off
- Touch controls
- CFM reduction system



GENERAL PROPERTIES

Width	36”
Model	ENI436AS
Dimensions	36”W x 22 1/4”D x 10 3/16”H
Electrical	220V-60Hz,7.7Kw, 34.5A
Finish	Eurokera Tempered, ultra deep black ceramic Scratch Proof glass
Controls	Electronic glass touch & slide w/red illumination
Installation type	Ducted out or recirculating w/kit
Ventilation[1]	4 speed (3 speed + boost)
Blower Type (Internal)	600 CFM
Noise (Min-max sones)[1]	1.5-6.8 Sones
Grease filter	4 layer, black anodized aluminum mesh grease filter
Cooking zones	4 Cooking Zones (3.7 kW)- 7 1/2” x 7.9”
Heating type	Induction
Heating level	10 levels (9 + boost, see details in chart below)

KITS

Recirculating	KIT0192385 (2 ceramic carbon filters)

WARRANTY:[2] **Two (2) Years Parts & In-Home Labor. Earn an additional One (1) Year of Parts & In-Home Labor by registering on elica.com**

Cooking level	Power (W)
Level 1	63 W
Level 2	105 W
Level 3	168 W
Level 4	252 W
Level 5	378 W
Level 6	588 W
Level 7	882 W
Level 8	1344 W
Level 9	2100 W
Booster	3700 W

Glass specifications	
Material	Glass ceramic cooking panel
Appearance	Texture black matte finish
Thickness	4 mm
Color in reflexion	Black
Color in transmission	Amber
Surface structure	Finger print resitant scratch resistant 80% less scratches & easy to care

SELF RIMMING INSTALLATION

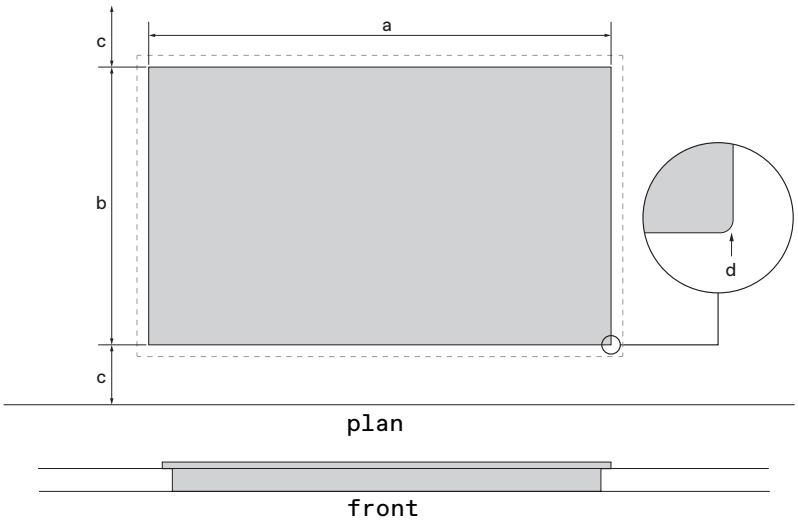

	ENI436AS
a	34 9/16" (87.7 cm)
b	21 1/8" (53.6 cm)
c	1 15/16" (5 cm) min
d	1 15/16" (5 cm)

FLUSH MOUNTED INSTALLATION

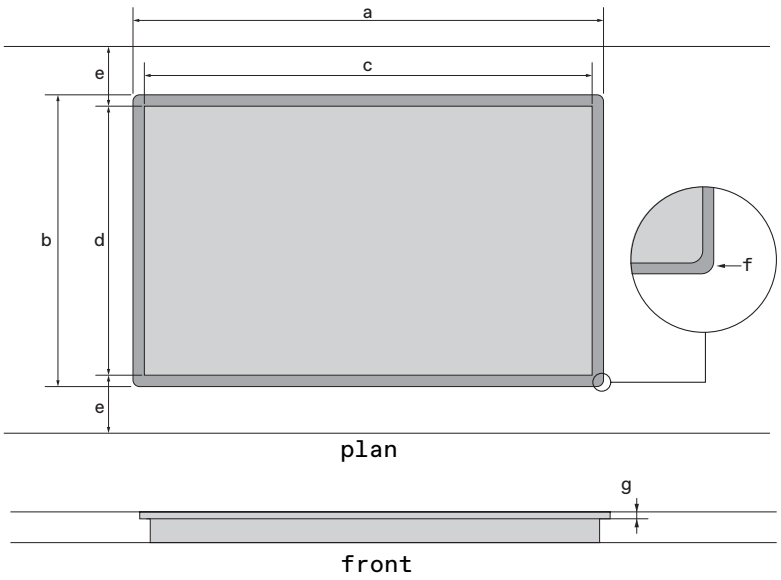

	ENI436AS
a	36 1/8" (91.8 cm)
b	22" (56.76 cm)
c	34 9/16" (87.7 cm)
d	21 1/8" (53.65 cm)
e	1 15/16" (5 cm) min
f	4 x Ø7
g	1/4" (0.63 cm)

The product images shown are for illustration purposes only and may not be an exact representation of the product.
[1] CFM and Noise data indicate the performance of the hood blower tested according to international standards. For AHAM Certified Ratings, established in accordance with California Title 24 Standardized test procedure, please refer to AHAM Certified Product Directory. Electric Ratings are declared according to UL.
[2] For valid warranty extension, register within 3 months from purchase. For USA & Canada Users Only.